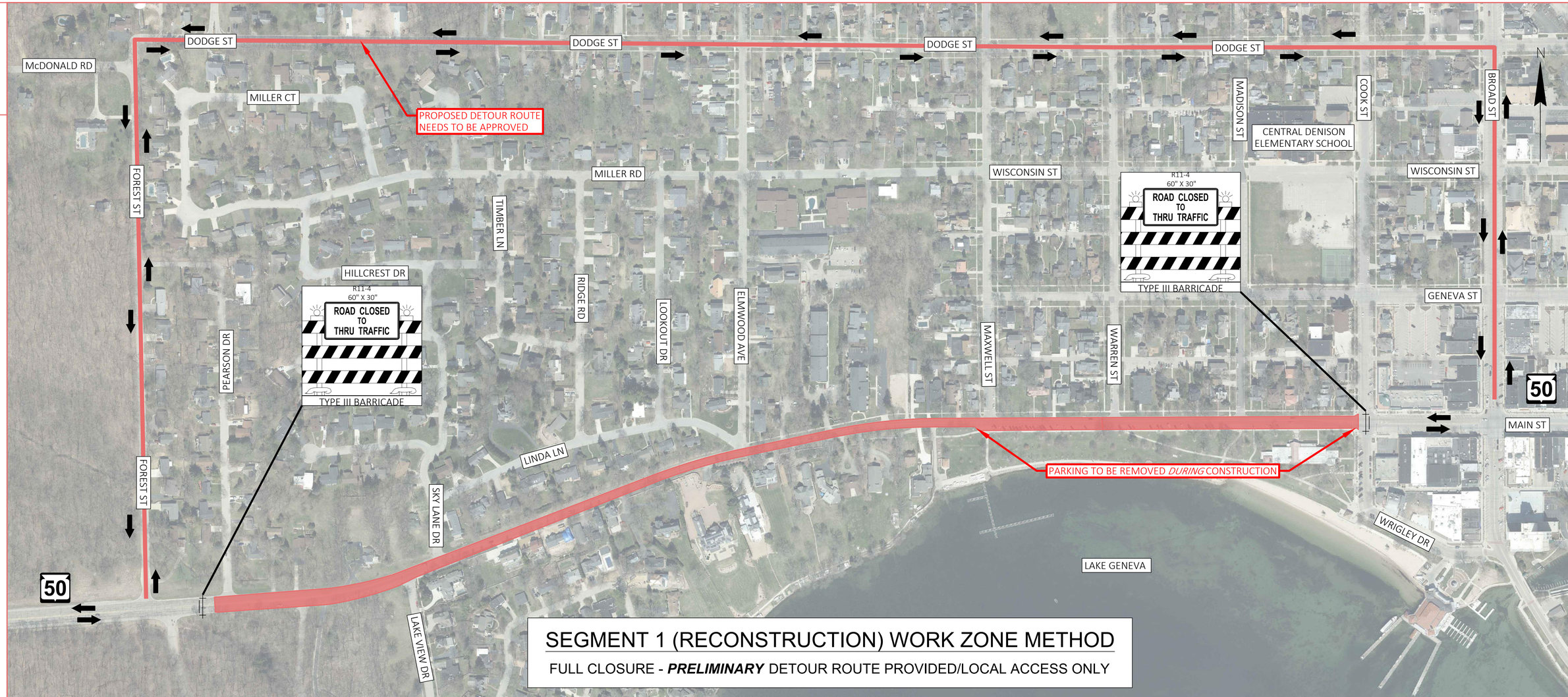

SEGMENT 1 (RECONSTRUCTION) WORK ZONE METHOD

FULL CLOSURE - ***PRELIMINARY*** DETOUR ROUTE PROVIDED/LOCAL ACCESS ONLY

STAGE 1
STH 50
LAKE VIEW DR TO COOK ST/WRIGLEY DR

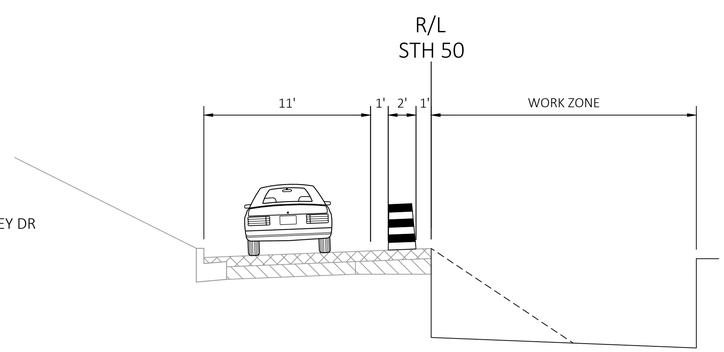

STAGE 2
STH 50
LAKE VIEW DR TO COOK ST/WRIGLEY DR

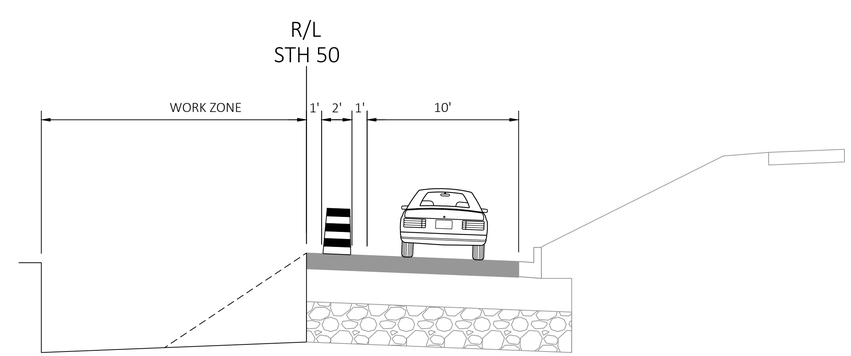

PROJECT NO: 3170-09-70/71	HWY: STH 50	COUNTY: WALWORTH	TRAFFIC STAGING CONCEPT OVERVIEW - SEGMENT 1	SHEET	E

FILE NAME : X:\BM1-3943 STH 50 LAKE GENEVA\02_COMMUNICATIONS\01_MEETINGS\02_EXTERNAL\240321_PIM #1\EXHIBITS\SEG 1.DWG
LAYOUT NAME - Segment 1-Overview and Staging Typical
PLOT DATE : 3/20/2024 3:51 PM
PLOT BY : VALBON LATIFI
PLOT NAME :
PLOT SCALE : 1 IN:350 FT